Development of Industrial door operation System For Elevator Actuated by various drives

Manik S.Shivankar, Hemant P. Kasturiwale, D.T. Ingole

Abstract— In an elevator door operation is very important and vital. A door for elevator needs to be not only robust, but it has also to guarantee safety and reliability in all operative conditions, even in the extreme ones It is commonly said in the elevator industry that, "75-80% of all elevator-related problems arise from elevator doors", It helps in managing traffic if operated properly. Failure of door operation system causes passenger entrapment, which is call back (call back means if elevator fails to operate then mechanic will have to go to customer premises to solve the problem.) to company, at the same time inconvenience and dissatisfaction to customer. Elevator door operators normally should include door motors, hangers, inverter, operator arm assemblies, etc. Broadly there exist two types of door operators in elevator. Basic door operator is called conventional door operator i.e. with relays and other related accessories. There should system which will lead to the reduction in callbacks. The elevator manufacturing companies are trying to use latest technology to reduce callback problem and thereby improvement in performance of elevator. The latest door operator is with modern drives with variable parameters. The modern drives will consume less power, no possibility of damage during testing, less wears & tears because opening and closing of door can be controlled & regularized using proper feedback system.

Index Terms— Variable voltage variable frequency(VVVF), Elevator door, Door operating system(DOS), Closing cycle, Door open limit, Slow down limit, Drive protection, Hoistway, Regenerative Drive.

1 Introduction

THE one of the innovations in the world of door operators has been the automatic door operator. Before elevators were fully automated, it was common to have an elevator attendant operate the opening and closing of the doors and/or gates. In the early days of elevators, doors were manually operated. Even today there are some residence elevators or handicap lifts which have manually operated doors. However, with the advent of the automatic elevator it was obviously desirable that the doors be motorized. The door operator consists of an electric motor generally with some type of speed reduction system (either gears or belts), mechanical linkages to the car doors and a motor speed control system. For example, current door operators are expected to provide faster door opening and closing speeds, even when variations of door and wind conditions are present. Today's door operators have proven to be dependable workhorses, having evolved to become highly sophisticated by utilizing modern technologies such as serial protocols, optical sensors and encoders, making the use of closed-loop and variable-voltage, variable-frequency (VVVF) drives possible.[1][3] By using these modern technologies, we now have greater control over the door operator's operation, thus providing superior performance and safety for passengers now have greater control over the door operator's operation, thus providing superior performance and safety for passengers

- *Manik S Shivankar is currently pursuing Master of Engineering(Digital Electronics)from SGBAU,Amravati..*
  E-mail: msshivankar12@rediffmail.com
- *Hemant Kasturiwale,A.P.at TCET, Mumbai.*
  Email:hemant1273@rediffmail.com
- *Dr. D.T.Ingole is Principal at PRMIT,Badnera(MS).*
  E-Mail: dtingole@mitra.ac.in

2 Conventional Elevators Door Opeartion System

2.1 Introduction to Elevator Door Operators

The average elevator door opens and closes more than 200,000 times a year. No wonder the majority – more than 70% – of all elevator trouble calls are caused by faulty or worn-out door components. Doors that are noisy, unreliable, unattractive or operating inefficiently could reflect poorly on building safety and management. Under-performing and unreliable elevators hinder efficient building operation, causing probable downtime and expenses. Door operation upgrade packages are available for every elevator and provide building owners the flexibility to retain or replace all or part of existing hoist way door equipment. [3] A modernized elevator door system delivers smooth and efficient operation and performs according to a building's needs. Modernization packages should offers customized solution which will require less power than conventional door operators. The mechanical system includes a linear door drive system, with large-diameter door rollers and a substantial track to minimize friction and reduce noise. An energy-efficient synchronous motor, closed-loop control and inverter drive system allow improved performance and energy efficiency compared to conventional systems. [7]

2.2 Conventional Door Operator

The conventional Door Operators will operate basically on relays. Here, door operators use sets of relays built for ON and OFF for closing &/ opening of door by disconnecting supply

to door motor. One of the typical door operators without Drives shown in fig 1.

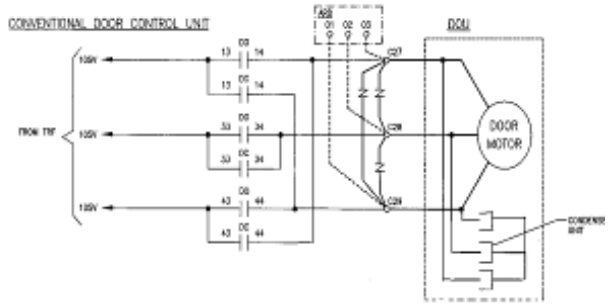

fig.1 Basic Diagram of Conventional Door Operator of elevator

The above Diagram shows Typical door operator without Drive. It require 100V 3 phase AC Voltage which is applied to door motor through DO (door open) & DC (Door Close) relay contacts. To open door controller makes DO relay ON & motor rotates in one direction to open the door. For closing the door DC relay becomes on there by changing first & third phase of the motor to rotate the motor in opposite direction. Although it is simple this system has many drawbacks namely-

1. During Opening and Closing of door may bangs & it can lead to noise. So frequent adjustment is required to avoid noise because of door.
2. Relays are prone to failure as it is electromechanical device.
3. Power consumption is more.
4. It is basically a single speed operation.

3 Modern Elevator Door Operators

3.1 Structure of Elevator Door

The mechanical part of the elevator door mainly consists of car doors, landing doors, door locks, door protection devices and so on. Among them ,the car door and landing door plays an important role in protecting passengers from collision with the elevator hoistway and preventing the waiting passengers from falling into the elevator hoistway.[6][7].

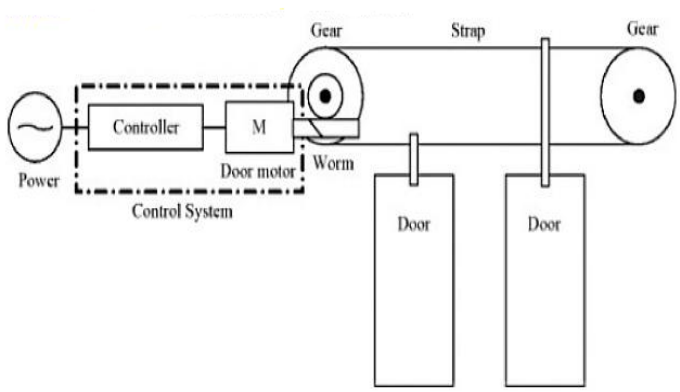

fig.2 Structure of Automatic Elevator Door System

The mechanical part of the elevator door mainly consists of car doors, landing doors, door locks, door protection devices and so on. Among them, the car door and landing door plays an important role in protecting passengers from collision with the elevator hoistway and preventing the waiting passengers from falling into the elevator Currently, there are two structures of the car doors and landing doors: The single door & double door opening from the middle. To improve the rapidity of the door system double door system is mostly adapted in high performance elevator door systems.
There are two major types of Elevator door motor systems.
DC Motor Drive system & AC Motor Drive systems' high performance Elevator door system should have advantages such as

1. Smoothness
2. Low noise
3. High efficiency
4. Security
5. Short waiting time
6. Improved transport capacity of the Elevator

The research on intelligence, small size, high efficiency, reliable operation & easy maintence for elevator doors, will be one of the developing directions of the elevator industry.
According to control signals send by the host computers, elevator door motor system drives the elevator door motor to control the opening & closing of the car door and landing door in an elevator the elevator door runs frequently, so fast and reliable operation of elevator doors for ensuring normal working of elevator is quite important. [4][6]

1. Elevator Door controller:

The elevator door controller uses microprocessor. It is primarily used to control the door motor installed at the top of the elevator car, and drive the landing doors by a mechanical linkage to open and close the landing doors and car doors along the given curve quickly and accurately.

2. Safety Detection subsystem:

In order to prevent the passengers from being injured when they are going into or out of the elevator, the safety detection subsystem is set in the elevator control system .There are two common types of safety detection subsystems: contact detection device is mainly based on safety edge, and a non contact detection device includes photoelectric detection device, ultrasound monitoring device, electromagnetic induction detector and infra red light curtain detector.

3.2 Elevator Door Operation opening and closing cycle curves.

The elevator door control system drives a gear box and mechanical transmission through the door motor to complete the process of the opening and closing of car door and the landing door. The opening and closing for the elevator car is speed changing process including start, stop, acceleration and deacceration. In order to guarantee the opening and the closing for elevator door smoothly and rapidly, and avoid the closing at the beginning and end, speed regulating control of the elevator door motor is essential. Unlike conventional door systems here door opening & closing is smooth because of vvvf drives which provides the velocity profile. Acceleration, Deceleration, frequency etc parameters can be adjusted in drive. Main features of acceleration are smooth ride without any

hiccups. The common curve of opening and closing of the elevator door as shown here-

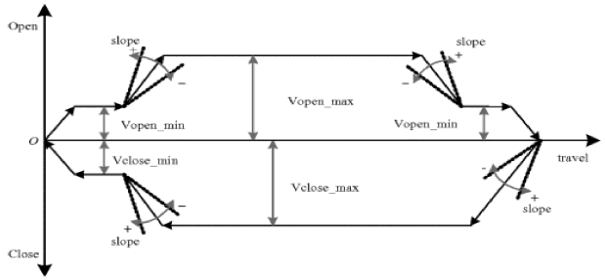

fig. 3. Elevator Door Operation Cycles.

Door motor runs at low speed to ensure smooth opening in the initial opening stage ,then the elevator door accelerates to high speed operation.Consideing the safely of passengers the average speed of closing should be lower than the average speed of opening so as to avoid banging or oscillating .

4. Door Drive:

4.1 Door Drive for AC Motors

The advanced door drive uses a microprocessor controlled frequency inverter suitable for AC motor application. The 3-phase inverter is the power interface between the µP system and the motor. Ultra-fast switching technology using IGBT device leads to noiseless operation and low current ripple due to the high switching frequency of above 15 kHz. A suitable gear reduces the speed of the motor shaft according to the requirements of the mechanical environment. The control and profile and PWM- pulse pattern generation are done by a microprocessor system. Position recognition, security and motor/inverter protection functions are implemented. Furthermore the µP system has to establish the communication via the serial communication. Generally it uses Encoder fitted on shaft of motor. Device automatically calculates door motion parameters (e.g. speed profile, acceleration and deceleration points, acceleration values) based on the door physical characteristics (weight and width) such as to ensure optimum operation of the drive. If door operation is required during mains failure a 24V battery of minimum 1.2Ah capacity must be connected externally. Use of two standard 12V batteries connected in series is possible. An automatic battery charger circuitry is a part of the controller board and is designed to charge battery with 200 mA current, which is sufficient to keep the battery fully charged. All In- and Outputs for signal used are optically insulated and short circuit protected. [7]

Features:

1. Smoother acceleration/deceleration of door
2. Best adjustment to electrical motor characteristic
3. Better drive performance
4. Closed loop position control ensures smooth run
5. Adaptive Fuzzy logic Obstacle detection
6. Event logging no loss of data after power down
7. Event Logging History: better analysis of errors and event dependencies
8. with optical isolation: increases robustness against noise disturbances
9. Output signal lines short circuit protected

4.2 Door drive for DC Motor:

Dc Drive is complete digital system that provides individual drive and system control. it uses microprocessor for power conversion and drive control. Interface to main elevator controller is provided through RS232, RS422 Serial communication.Diagonostic & set up capability is provided through control and display units.[4][5]

This drive converts ac input power to variable dc voltage for application to DC motor. In case of regenerative drive DC voltage produced by motor is converted back to ac and given to line.

Features:

Encoder monitoring
Over current protection
Phase loss protection

4.3 Elevator Drive and Door drive Motor:

Modern Elevators uses closed-loop, door operator with a permanent-magnet motor with a built-in encoder and a microprocessor-based inverter drive. The compact inverter drive enclosure mounts easily on the elevator car. The motor replaces the original motor when re-using existing operator packages or mounts to the new operator package when the complete door operator is being replaced or newly installed. The application of AC drive technology to various types of AC elevator motors requires a thorough understanding of the clear advantages and tradeoffs, in order to make the very best possible choices for AC drives and motors. In addition, comparison of AC and DC motor and drive technology does not result in a clear-cut
"winning" technology to be applied universally. Rather, each technology has unique advantages and disadvantages.

5 Conclusion

The elevator door control drive should be intelligent drive with outstanding features that include a modularized design for easy removal and installation of terminal blocks, a power switch designed for safety, and a built-in digital keypad that provides quick operation control. The drive need to offer door control modes for door opening and closing. The distance control mode is controlled by an encoder that counts PG pulses to obtain the speed position without sensor. The speed control mode is to control the speed and it needs detection sensors to execute the door open and close action. The multi-step speed control mode generates a smooth door open-and-close curve using digitized control. With modern power electronics and advanced microprocessor technology, AC Motor Drives are able to efficiently control motor speed, improve machine automation and save energy. AC Drives accurately control speed and torque, smoothly handle an increased load, and provide numerous custom control and configuration operating modes to enhance and improve machine automation.

ACKNOWLEDGMENT

We are highly indebted to OTIS for providing necessary information on technical Paper on Elevator.

REFERENCES

[1] www.ecicanada. Com

[2] Osama, M.; Abdul_Azim, O, "Implementation and performance analysis of an elevator electric motor drive system"IEEE Conference, Power system Conference, 2008.

[3] www. elevatorworldindia.com.

[4] Mutoh, N.; Ohnuma, N.; Omiya, A.; Konya, M., "Power Electronics, A motor driving controller suitable for elevators," IEEE Transactions on Volume: 13, Issue: 6, Publication Year: 1998

[5] Mahir Dursuni, Harun Ozay, "Design and analysis of a double sided linear switched reluctance motor driver for elevator door"ISSN 0033-2097, R. 87 NR 5/2011

[6] Carlos Patrão, Aníbal De Almeida, João Fong, and Fernando, "Elevators and Escalators Energy Performance Analysis" 2010 ACEEE Summer Study on Energy Efficiency in Buildings

[7] Chang- Liang Xia, "Permanent Magnet Brushless DC Motor Drives and Controls," Wiely Publications.